GUIDE TO STORED PROGRAM CONTROL SWITCHING

BELL SYSTEM PLANT OPERATIONS TRAINING CENTER

Operations Department - Plant Division

INTRAOFFICE CALLS

	TAB
#1 ESS DIAL TONE CONNECTION AND DIGIT RECEPTION	4
#2 ESS DIAL TONE CONNECTION AND DIGIT RECEPTION	5
#101 ESS DIAL TONE CONNECTION AND DIGIT RECEPTION	6
#1 ESS INTRA OFFICE	26
#2 ESS INTRA OFFICE	27
#101 ESS INTRA PBX	28

INTEROFFICE CALLS

ORIGINATING OFFICE	TAB	TAB	TERMINATING OFFICE
#1 ESS	1	14	TSPS #1 DIGIT RECEPTION
#2 ESS	2	21	#1 ESS
#101 ESS	3	22	#2 ESS
		24	AIS INITIAL CONNECTION
		25	AIS FILE AND ANNOUNCEMENT
		23	#101 ESS
		*15	TSPS OPERATOR CONNECTION

*USE WITHOUT TSPS OUTPULSING FOR CALLS TERMINATING TO AN OPERATOR (i.e. Rate and Route)

TANDEM CALLS

ORIGINATING	TAB
#1 ESS	1
#2 ESS	2

INTERMEDIATE	TAB
#1 ESS	12
#4 XB (ETS)	13
TSPS #1	16

TERMINATING	TAB
#1 ESS	21
#2 ESS	22
AIS	25

RED
PULSING
EQUIPMENT

BLUE
COMMON
EQUIPMENT

BLACK
SWITCHING
FRAME

GREEN
TRANSMISSION
PATH

ORANGE
SUBSCRIBERS
TELEPHONE

HINTS FOR USING THE GUIDE TO SPCS SWITCHING FUNDAMENTALS

1. A review of the system components diagram for a particular SPCS may be helpful.
2. Dial Tone Connection and Digit Reception diagrams outline the steps required to pre-condition an SPCS for originating intraoffice or interoffice calls.
3. Overall switching network configurations may be viewed by interjecting TABS 11, 12 or 13 between SPCS Outgoing and Incoming Call diagrams.

INDEX

INDEX

INDEX

NO. 1 ESS - TYPICAL OUTGOING CALL

CENTRAL CONTROL (CC)
- Determines that call is of INTEROFFICE type.
- Selects an idle outgoing trunk.
- Selects an idle Transmitter Circuit.
- Connects Transmitter to Trunk Circuit.

TRANSMITTER CIRCUIT
- Sends seizure signal to Distant Office.
- Outpulses called party directory number.

(CC)
- Idles Transmitter Circuit.
- Idles Customer Dial Pulse Receiver (CDPR).
- Connects Calling Party to Trunk Circuit.
- Transfers call supervision to Trunk Circuit.

TRUNK CIRCUIT
- Scanner detects called party answer.
- Scanner supervises both parties for disconnect.

NO. 1 ESS - TYPICAL OUTGOING CALL

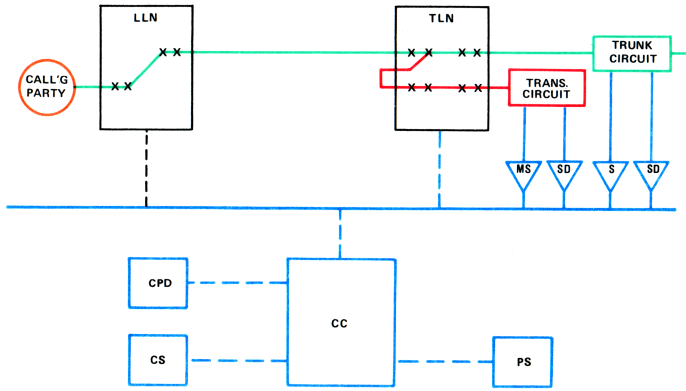

SPC INTERCONNECTING FACILITIES

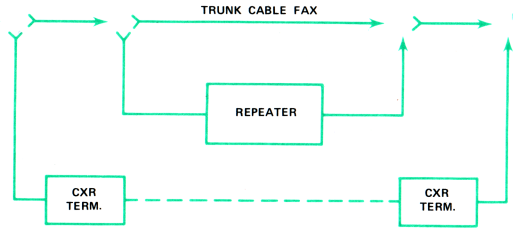

NO. 1 ESS - TYPICAL INCOMING CALL

TRUNK CIRCUIT – Scanner detects trunk seizure by distant office.

CENTRAL CONTROL (CC)
- Identifies Trunk Network Number (TNN).
- Selects idle Receiver Circuit.
- Establishes connection between Receiver and Trunk Circuits.

RECEIVER CIRCUIT
- Sends START signal to distant office.
- Detects called number digits.

(CC)
- Stores called number in temporary memory.
- Identifies terminating Line Equipment Number (LEN).
- Idles Receiver Circuit.
- Connects Audible Ringing Circuit to Trunk Circuit.
- Connects Ringing Circuit to called party.

RINGING CIRCUIT – Called party answer trips ringing relay.

(CC)
- Releases Audible Ringing and Ringing Circuit.
- Connects Trunk Circuit to called party.

TRUNK CIRCUIT – Scanner supervises both parties for disconnect.

NO. 1 ESS - TYPICAL INCOMING CALL

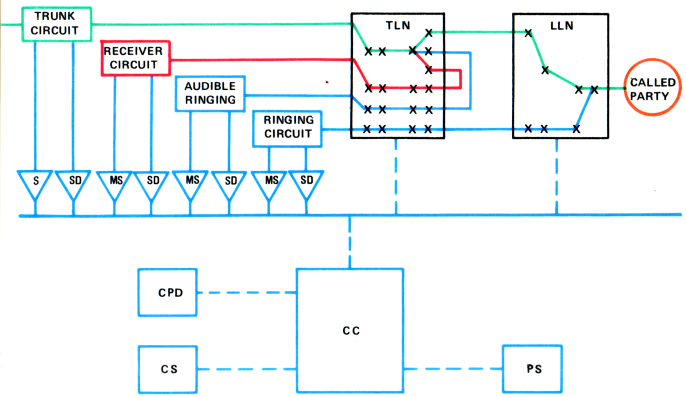

NO. 2 ESS - TYPICAL OUTGOING CALL

CENTRAL PROCESSOR (CP) – Determines that call is of INTEROFFICE type.
– Identifies Outgoing Trunk Group.
– Selects idle Trunk Circuit.
– Selects an idle Transmitter Circuit.
– Connects Transmitter to Trunk Circuit.

TRANSMITTER – Applies supervisory singals to distant office.
– Outpulses called number to distant office.

CP – Idles Transmitter Circuit.
– Idles Customer Dial Pulse Receiver (CDPR).
– Transfer Distant Office Supervision to Trunk Circuit.
– Connects Trunk Circuit to calling subscriber.
– Transfers calling supervision to Trunk Circuit.

TRUNK CIRCUIT – Scanner detects called party answer.
– Scanner supervises both parties for disconnect.

NO. 1 ESS - TYPICAL TANDEM CALL

TRUNK CIRCUIT (A) – Scanner detects seizure by originating office.

CENTRAL CONTROL (CC) – Identifies Trunk Network Number (TNN).
– Selects idle Receiver Circuit.
– Establishes connection between Receiver and Trunk Circuit (A).

RECEIVER CIRCUIT – Sends START signal to originating office.
– Detects called number digits.

(CC) – Stores called number in temporary memory.
– Translates called prefix.
– Selects idle outgoing trunk and idle Transmitter Circuit.
– Establishes connection between Transmitter and Trunk Circuit (B).

TRANSMITTER CIRCUIT – Sends seizure signal to terminating office.
– Outpulses called party directory number.

(CC) – Idles Transmitter Circuit
– Idles Receiver Circuit.
– Establishes connection between Trunk Circuit (A) and Trunk Circuit (B).

TRUNK CIRCUIT (A) – Provides disconnect supervision toward originating office.

TRUNK CIRCUIT (B) – Provides disconnect supervision toward terminating office.

NO. 2 ESS - TYPICAL INCOMING CALL

TRUNK CIRCUIT – Scanner detects trunk seizure by distant office.

CENTRAL PROCESSOR (CP) – Identifies Incoming Trunk Terminal Equipment Number (TEN).
– Connects Receiver to Trunk Circuit.
– Transfers supervision from Trunk to Receiver Circuit.

RECEIVER – Returns START signal to distant office.
– Detects digits received from distant office.

CP – Stores received digits.
– Determines called subscriber's TEN.
– Connects Ringing Circuit to called party.
– Transfers distant office supervision to Trunk Circuit.
– Idles Receiver.

TRUNK CIRCUIT – Provides Audible Ringing to calling party at distant office.

RINGING CIRCUIT – Called party answer trips ringing relay.

CP – Idles Ringing Circuit.
– Connects Trunk to called subscriber.
– Transfers called party disconnect supervision to Trunk Circuit.

NO. 2 ESS - TYPICAL OUTGOING CALL

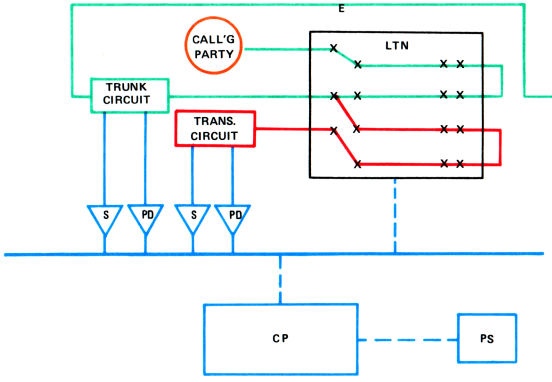

NO. 1 ESS - TYPICAL TANDEM CALL

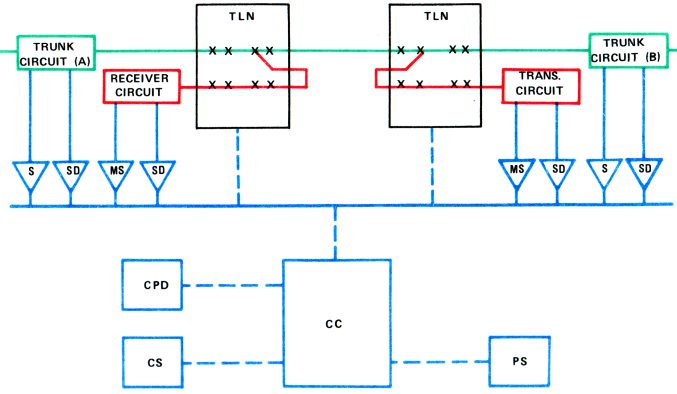

NO. 2 ESS - TYPICAL INCOMING CALL

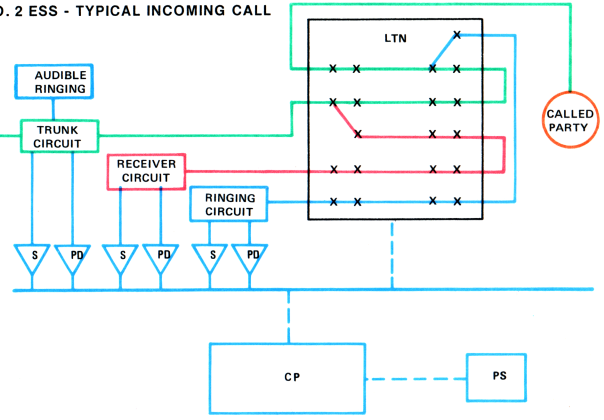

NO. 101 ESS - OUTGOING DIRECT DIAL CALL

CONTROL UNIT
- **CALL PROCESSOR** – Recognizes dialed '9' digit as a request for outgoing service.
  – Interrogates Line Information Store for out dialing restrictions.
  – Selects idle C.O. Trunk.
- **TRUNK CONTROL** – Seizes C.O. Trunk forward.

SWITCH UNIT
- **SWITCH CONTROL** – Scanner recognizes attachment of serving Central Office Sender or Originating Register to C.O. Trunk.

CONTROL UNIT
- **CALL PROCESSOR** – Returns second dial tone to STA 'A' from Digit Receiver.
  – Registers dialed digits and checks for code restrictions.
- **SENDER CONTROL** – Dial pulses digits to C.O. switching equipment.
- **CALL PROCESSOR** – Sends C.O. Trunk assignment to Switch Unit.

SWITCH UNIT
- **SWITCH STORE** – Associates STA 'A' and C.O. Trunk with assigned Time Slot.
- **SWITCH CONTROL** – Establishes TDS connection.
- **STA 'A'** – Receives audible ringing from terminating C.O. switching equipment.

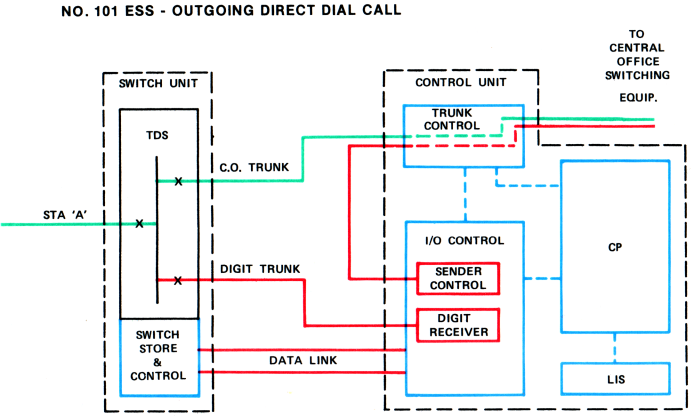

NO. 4 XB (ETS) TYPICAL CALL

- **INCOMING TRUNK (IT)** – Recognizes seizure from distant end and selects idle Sender (SDR) via the Link Controller.
- **SPC-1A** – Interrogates Link Controller.
  – Identifies IT and SDR.
  – Instructs Controller to connect SDR.
- **SDR** – Registers digits received from distant office.
  – Seizes Decoder Channel (DCH) via Decoder Connector (DEC CONN).
- **SPC-1A** – Interrogates DCH to identify the SDR and the called code.
  – Determines the IT from memory.
  – Translates the called code into outgoing routing information.
  – Seizes an idle Marker via the DCH.
- **MARKER** – Selects an idle Outgoing Trunk (OGT).
  – Establishes a connection through the Incoming and Outgoing Links.
- **SDR** – Outpulses called number toward terminating office.
  – Releases, Transferring supervision to IT.

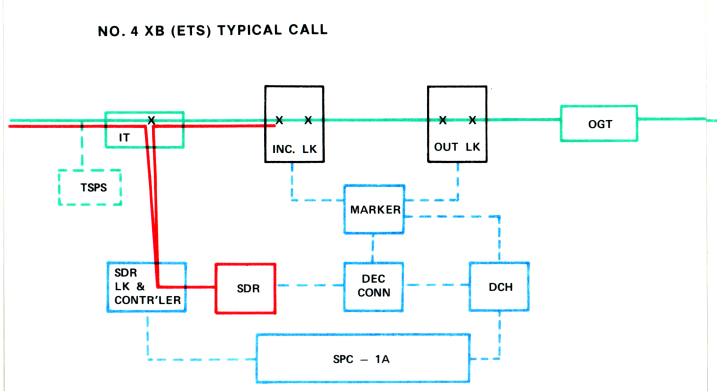

NO. 101 ESS - DIRECT INWARD DIAL CALL

- **C.O. SWITCH EQUIPMENT** – Seizes #101 ESS C.O. Trunk.

CONTROL UNIT
- **C.O. TRUNK** – Recognizes seizure and notifies Switch Unit.

SWITCH UNIT
- **SWITCH CONTROL** – Scanner detects Off-Hook condition.
  – Identifies C.O. Trunk equipment.

CONTROL UNIT
- **CALL PROCESSOR** – Selects idle Digit Trunk, Digit Receiver and Time Slot.

SWITCH UNIT
- **SWITCH CONTROL** – Establishes TDS connection between C.O. Trunk and Digit Trunk.

CONTROL UNIT
- **CALL PROCESSOR** – Sends START Signal to C.O. Switch equipment via Trunk Control.
- **DIGIT RECEIVER** – Receives dialed extension number.
- **CALL PROCESSOR** – Translates extension number into STA 'A' equipment.
  – Sends STA 'A' equipment number and ringing information to Switch Store.

SWITCH UNIT
- **SWITCH CONTROL** – Rings STA 'A' and passes audible ringing to C.O. Switch equipment.
  – Scanner detects STA 'A' answer.

CONTROL UNIT
- **CALL PROCESSOR** – Sends STA 'A' equipment and C.O. Trunk number with Time Slot to Switch Store.

SWITCH UNIT
- **SWITCH CONTROL** – Establishes TDS connection between C.O. Trunk and STA 'A'.

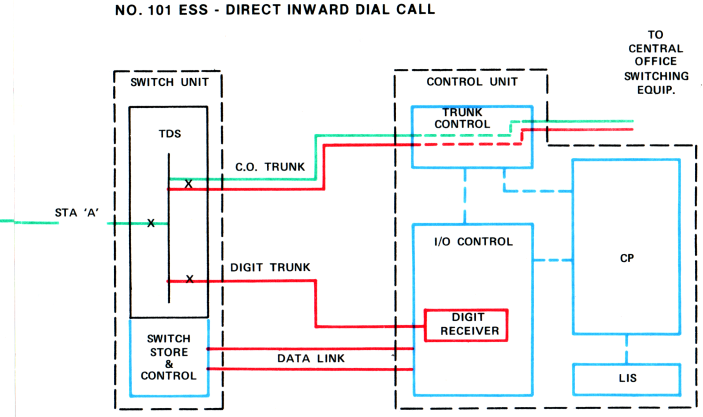

NO. 1 ESS - DIAL TONE CONNECTION AND DIGIT RECEPTION

LINE SCANNER (LS) – Detects calling party off-hook condition.

CENTRAL CONTROL (CC)
- Determines that this is a request for service.
- Identifies the Line Equipment Number (LEN).
- Translates the LEN class of service information.
- Selects an idle Customer Dial Pulse Receiver (CDPR).
- Establishes a switching network connection between the Calling Party and the CDPR.
- Transfers Line supervision to CDPR.

(CDPR)
- Returns dial tone to calling subscriber.
- Detects dialed digits via Master Scanner (MS).

(CC)
- Converts detected dial pulses into called directory number.
- Records called number in temporary memory.

TSPS NO. 1 DIGIT RECEPTION

TRUNK SCANNER (TS)
- Monitors status of trunk.
- Detects request for service.

SPC-1A
- Identifies Trunk Equipment.
- Determines type of Receiver Circuit needed.
- Connects Receiver to Trunk Circuit.
- Transfers calling party supervision to Receiver Circuit.

RECEIVER
- Signals local office to begin outpulsing.
- Detects MF pulses.
- Receives called and calling tel. numbers from local office.

SPC-1A
- Stores both tel. numbers.
- Determines type of call (assume 0+ coin).
- Transfers calling party supervision back to Trunk Circuit.
- Idles Receiver Circuit

AIS - INITIAL CONNECTION (ANI)

TRUNK SWITCHING NETWORK CONTROL (TSNC)
- Detects Incoming Trunk off-hook.
- Identifies Trunk equipment location.

CENTRAL PROCESSOR
- Receives seizure data via Master Scanner
- Determines trunk type.
- Assigns specific Time Slot to this call.
- Selects an MF Receiver.
- Transmits connection data to TSNC.

TSNC
- Establishes TDS connection during prescribed Time Slot.

MF RECEIVER
- Signals local office to begin outpulsing.
- Receives class digit and called tel. number.

CENTRAL PROCESSOR
- Stores called number.
- Orders TSNC to release MF Receiver.

TSNC
- Releases TDS connection.

NO. 1 ESS - DIAL TONE CONNECTION AND DIGIT RECEPTION

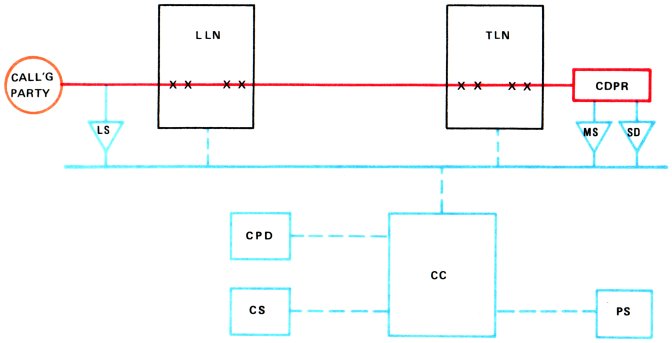

TSPS NO. 1 DIGIT RECEPTION

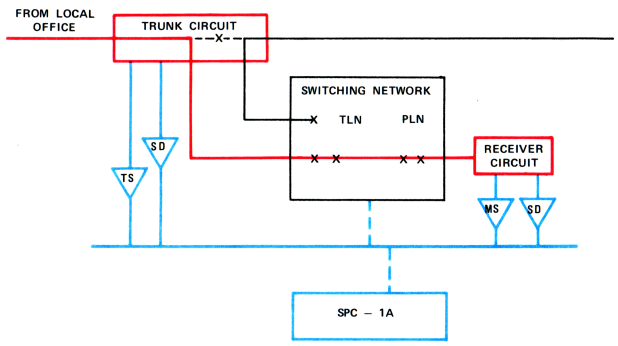

AIS - INITIAL CONNECTION

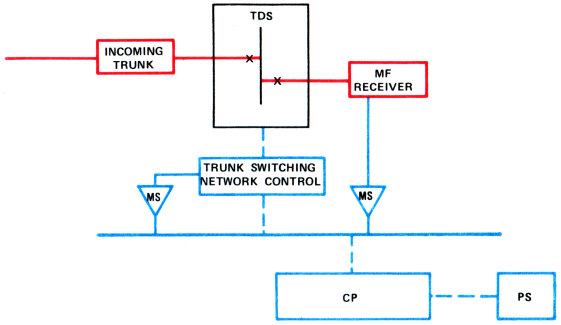

NO. 2 ESS - DIAL TONE CONNECTION AND DIGIT RECEPTION

LINE SCANNER (LS)
- Detects calling subscriber off-hook condition.
- Reports request for service to Central Processor (CP).

CP
- Identifies calling subscriber Terminal Equipment Number (TEN)
- Determines the calling party class of service.
- Connects a Customer Dial Pulse Receiver (CDPR) to the calling subscriber's Line.
- Transfers calling line supervision to CDPR.
- Controls CDPR via signals to Peripheral Decoder (PD).

CDPR
- Returns dial tone to calling subscriber.
- Detects dial pulses.

CP
- Converts detected dial pulses into directory number digits.
- Records dialed digits in temporary memory.

NO. 2 ESS - DIAL TONE CONNECTION AND DIGIT RECEPTION

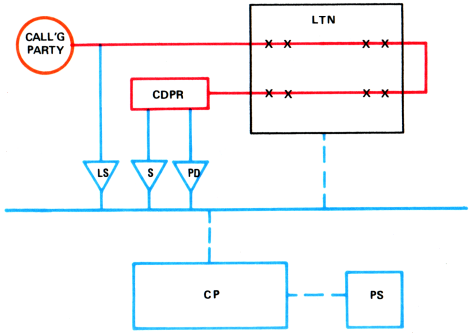

TSPS NO. 1 - OUTPULSING AND OPERATOR CONNECTIONS

CONDITIONS:
1. Trunk Circuit is split into seperate incoming and outgoing sections.
2. Outpulsing and Operator connections are established by SPC-1A in the same time frame.

OPERATOR CONNECTIONS:

SPC-1A
- Selects an available Operator Position.
- Sends call data to Position Subsystem via data interface.

POSITION SUBSYSTEM
- Lights call data and nixie lamps at Operator Position.

SPC-1A
- Connects talk path between Trunk incoming section and Operator Position.
- Sends zip tone to alert Operator.

OPERATOR
- Requests initial coin deposit.

OUTPULSING

SPC-1A
- Connects outgoing section of Trunk Circuit to Outpulser Circuit.

OUTPULSER CIRCUIT
- Monitors for toll office sender attached.
- Outpulses called tel. number to toll office.

SPC-1A
- Idles Outpulser Circuit

TSPS NO. 1 - OUTPULSING AND OPERATOR CONNECTIONS

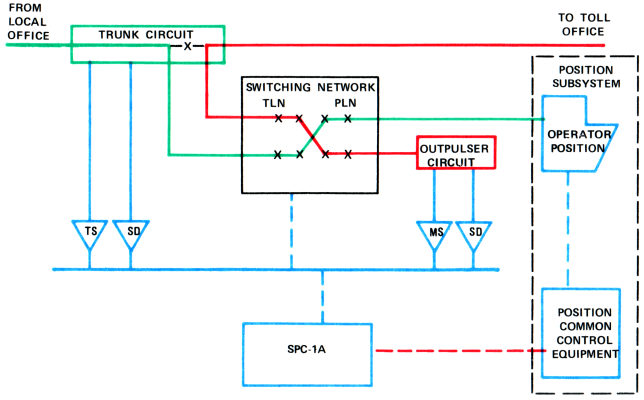

AIS - FILE COMMUNICATION AND ANNOUNCEMENT CONNECTIONS

CENTRAL PROCESSOR
- Requests File lookup of called tel. number.

FILE SUBSYSTEM
- Performs lookup operation on Number Store File.
- Determines status of called number and new tel. number (if appropriate).
- Informs Central Processor when search has been completed.

CENTRAL PROCESSOR
- Reads status information directly from File Control.
- Selects appropriate Announcement Tracks.

TRUNK SWITCHING NETWORK CONTROL (TSNC)
- Establishes TDS connection to Announcement Trunk associated with first Announcement Track.

CENTRAL PROCESSOR
- Orders sequential changes of Announcement Tracks needed to complete the intercept message.

TSNC
- Establishes TDS connections to Announcement Trunks successively under control of CP.

AIS - FILE COMMUNICATION AND ANNOUNCEMENT CONNECTIONS

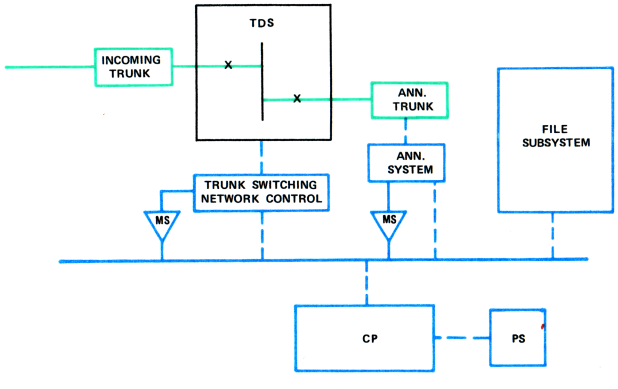

NO. 101 ESS - TYPICAL DIAL TONE CONNECTION AND DIGIT RECEPTION

Switch Unit

Store Control – Scanner detects off-hook at Station 'A' (STA 'A').
Switch Store – Identifies calling party Line Equipment.
– Notifies Control Unit via Data Link.

Control Unit

Input/Output – Sends call data to the Call Processor.
Call Processor – Determines that this call is a new origination.
– Selects an idle Digit Trunk and Digit Receiver.
– Assigns a specific Time Slot.
– Passes assigned information to Input/Output Control.
Input/Output – Sends assigned information to Switch Unit via Data Link.

Switch Unit

Switch Store – Associates Line Circuit and Digit Trunk with assigned Time Slot.
Switch Control – Establishes Time Division Switch (TDS) connection.
STA 'A' – Receives dial tone from Digit Receiver.
– Dials called party number into Digit Receiver.

Control Unit

Call Processor – Translates dialed digits into called number.

NO. 101 ESS - TYPICAL DIAL TONE CONNECTION AND DIGIT RECEPTION

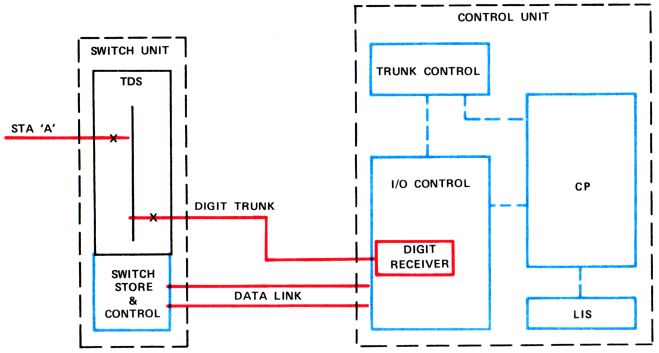

TSPS NO. 1 TALKING CONNECTION

SPC-1A – Establishes Trunk Circuit cut thru.
– Transfers called party supervision to Trunk Circuit.

TRUNK CIRCUIT – Cut thru permits calling party to hear Audible Ringing.
– Scanner detects called party answer.

OPERATOR – Able to talk with both parties.
– Performs any additional actions required.
– Releases Position and becomes available for other calls.

SPC-1A – Starts initial period timing.
– Sends Coin Collect signal to local office.
– Connects call to any Operator Position at end of initial period.

OPERATOR – Notifies customer of overtime.

TRUNK CIRCUIT – Scanner detects disconnect by either party.

SPC-1A – Records call data on AMA tape.

TSPS NO. 1 TALKING CONNECTION

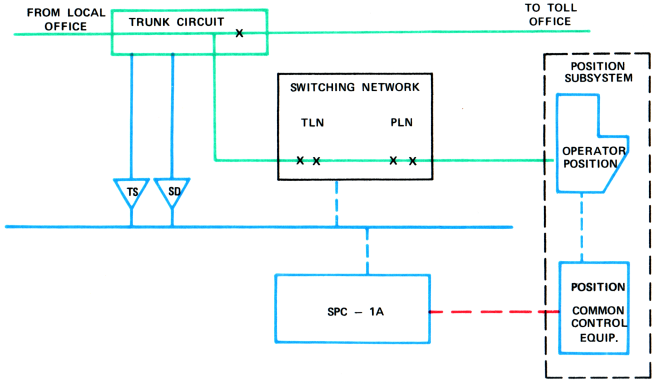

NO. 1 ESS - TYPICAL INTRAOFFICE CALL

CENTRAL CONTROL (CC) – Determines that call is of INTRAOFFICE type.
– Identifies called party Line Equipment Number LEN.
– Translates terminating Class of Service information.
– Selects an idle Ringing Circuit and Audible Ringing Circuit.
– Idles Customer Dial Pulse Receiver (CDPR).
– Connects Audible Ringing to calling party.
– Connects Ringing Circuit to called party.
– Provides called and calling party supervision via the Master Scanner (MS).

RINGING CIRCUIT – Called party answer trips ringing relay.

(CC) – Idles Audible Ringing Circuit.
– Idles Ringing Circuit.
– Connects calling and called party via Junctor Circuit.

JUNCTOR CIRCUIT – Scanner supervises both parties for disconnect.

NO. 1 ESS - TYPICAL INTRAOFFICE CALL

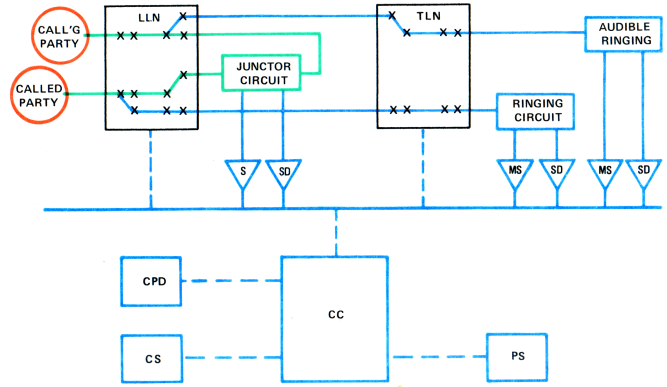

NO. 1 ESS AMA (9 TRACK)

PROGRAM STORE (PS) – Provides instructions for loading, combining and unloading AMA billing data.

CENTRAL CONTROL (CC) – Stores billing data in AMA Registers.

AMA REGISTERS – Storage for billing data during in-process calls.

CC
- Upon completion of call, combines billing data into single entry.
- Transfers entry to AMA Buffer.

AMA BUFFER – Stores completed single entry billing data.

CC
- Unloads AMA Buffer when filled.
- Transfers data to AMA Recorder.

AMA RECORDER – Writes billing data on AMA tape as a single entry.

NO. 1 ESS AMA (9 TRACK)

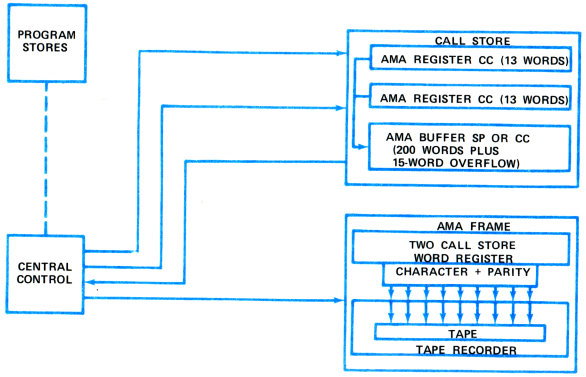

NO. 1 ESS - SYSTEM COMPONENTS

CENTRAL CONTROL (CC)
- Controls the actions of almost all other system units.
- Performs most of the system data processing tasks.

PROGRAM STORE (PS)
- Provides a READ ONLY, semi-permanent memory.
- Stores the #1 ESS operational program and translation data.

CALL STORE (CS)
- Provides a READ/WRITE, temporary memory.
- Stores call processing data.

CENTRAL PULSE DISTRIBUTOR (CPD) – Enables peripheral units under instructions from CC.

SIGNAL DISTRIBUTOR (SD)
- Operates electromechanical devices in #1 ESS.
- Serves as buffer between CC (usec speed) and relays (msec speed).

SCANNER (S)
- Reflects busy/idle status of Lines, Trunks and Service Circuits.
- Monitors supervisory signals.

MASTER SCANNER (MS) – Performs additional Scanner functions (detects dial pulses, etc.).

LINE LINK NETWORK (LLN) AND TRUNK LINK NETWORK (TLN) – Provides switching flexibility between Trunks and Lines.

NETWORK CONTROL – Opens and closes network switching paths in response to instructions from CC.

PERIPHERAL UNIT BUS (PU BUS) – Serves as common interconnection between units.

NO. 1 ESS - SYSTEM COMPONENTS

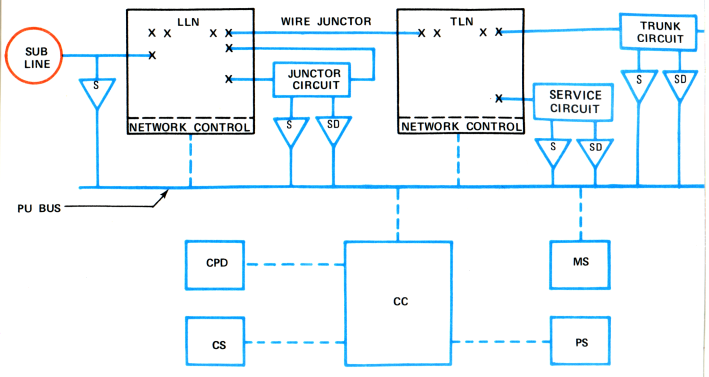

NO. 2 ESS - TYPICAL INTRAOFFICE CALL

CENTRAL PROCESSOR (CP)
- Determines that call is of INTRAOFFICE type.
- Identifies called subscriber Terminal Equipment Number (TEN).
- Idles CDPR.
- Connects Junctor Circuit to calling subscriber line.
- Connects Ringing Circuit to called subscriber line.

JUNCTOR CIRCUIT
- Applies Audible Ringing to calling subscriber line.
- Provides supervision of calling subscriber line.

RINGING CIRCUIT – Called party answer trips ringing relay.

CP
- Idles Ringing Circuit.
- Disables Audible Ringing.
- Connects called subscriber to calling subscriber.
- Transfers supervision of called subscriber line to Junctor Circuit.

JUNCTOR CIRCUIT – Scanner supervises both parties for disconnect.

NO. 2 ESS - TYPICAL INTRAOFFICE CALL

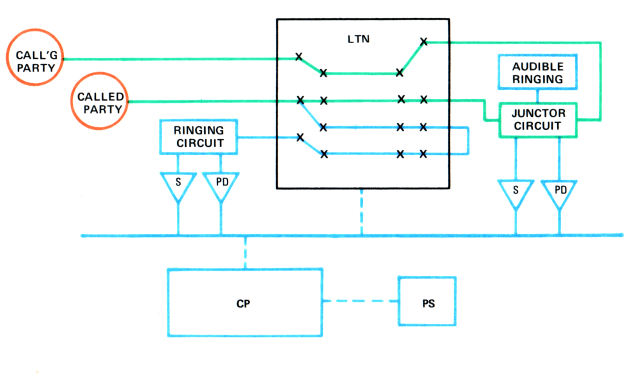

NO. 2 ESS AMA

PROGRAM STORE (PS) – Provides instructions for billing.

PROGRAM CONTROL (PC) – Controls storage of AMA entries in Call Store AMA Buffer.

CALL STORE (CS) – Unloads AMA billing data to AMA Recorder at periodic intervals.

AMA RECORDER – Writes billing data on AMA tape as three separate entries.
– Billing data for other calls is interleaved between the three entries.

#2 ESS SYSTEM COMPONENTS

CENTRAL PROCESSOR (CP) – Consists of Program Control (PC) Call Store (CS) and Input/Output (I/O) Control units.
PC – Executes instructions read from Program Store (PS).
– Uses logic circuitry to process data.
CS – Provides READ/WRITE temporary memory.
– Stores call processing information.
I/O – Interfaces with Peripheral Units.
– Includes pulse distributing equipment and buses.

PROGRAM STORE (PS) – Provides READ ONLY semipermanent memory.
– Stores the operational program and translations.

PERIPHERAL DECODER (PD) – Operates relays in Trunk, Junctor and Service Circuits in response to instructions from CP.

SCANNER (S) – Reflects busy/idle status of Trunk, Junctor and Service Circuits.
– Monitors dial pulses and supervisory signals.

NETWORK CONTROLLER – Opens or closes switching network paths in response to signals from CP.

LINE TRUNK NETWORK (LTN) – Provides switching flexibility between Lines and Trunks.

COMMUNICATION BUS SYSTEM – Provides common interconnection between units.

NO. 101 ESS - TYPICAL INTRA-PBX CALL

CONTROL UNIT
CALL PROCESSOR – Determines that call is of Intra-PBX type.
– Identifies STA 'B' line equipment.
– Checks Call Store record to determine if STA 'B' is busy.
– Passes STA 'A' equipment number, STA 'B' equipment number, Time Slot and ringing instructions to Switch Unit via Data Link.

SWITCH UNIT
SWITCH STORE – Associates STA 'B' line equipment with Time Slot.
SWITCH CONTROL – Establishes ringing connection to STA 'B' and
– audible ringing to STA 'A'.
– Recognizes off-hook by STA 'B' and notifies Control Unit.

CONTROL UNIT
CALL PROCESSOR – Passes STA 'A' line equipment number, STA 'B' line equipment number and Time Slot assignment to the Switch Unit.

SWITCH UNIT
SWITCH STORE – Associates STA 'A' and STA 'B' line equipments
– with assigned Time Slot.
SWITCH CONTROL – Establishes TDS talking connection between STA 'A' and STA 'B'.

NO. 2- ESS AMA

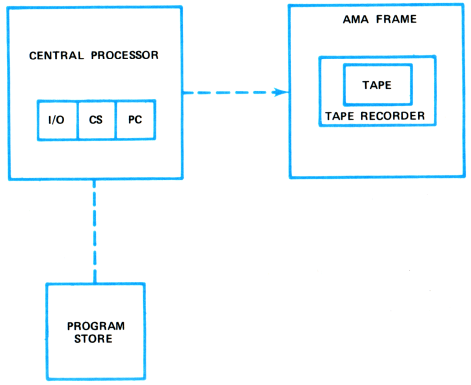

NO. 2 ESS - SYSTEM COMPONENTS

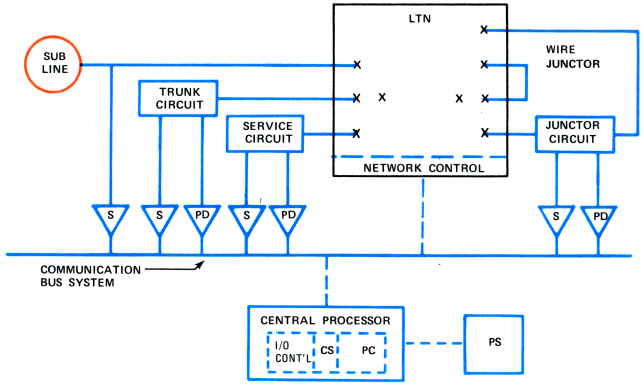

NO. 101 ESS - TYPICAL INTRA-PBX CALL

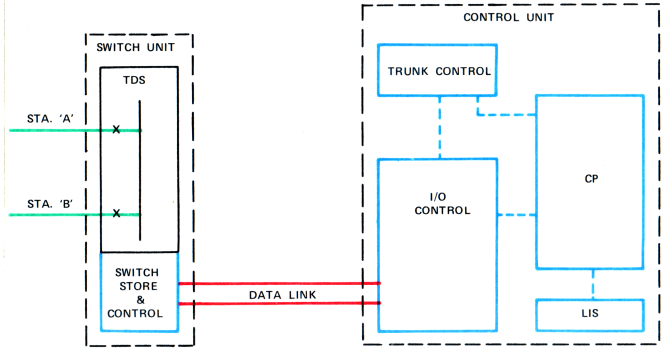

AIS - SYSTEM COMPONENTS

CENTRAL PROCESSOR (CP) — Hardware elements same as #2 ESS.

PROGRAM STORE (PS)
- Contains only the AIS generic program.
- Provides READ ONLY semipermanent memory.

FILE SUBSYSTEM
- Consists of Number Storage File and File Control units.
- Uses a disc type memory.
- Stores data related to tel. numbers that are on intercept.
- Provides emergency backup information for system data stored in Call Store.

TRUNK SWITCHING NETWORK CONTROL
- Consists of connector, scanner and memory circuits.
- Supervises the states of trunks that terminate on the Time Division Switches (TDS).
- Establishes TDS connections through common buses to interconnect trunks and other circuits.
- Generates synchronized clock pulses to develop Time Slots and to control data manipulation.
- Stores TDS connection data.
- Can be written into and/or read from internally and by CP.

ANNOUNCEMENT SYSTEM — Provides a continuous audio output of a fixed vocabulary or prerecorded phrases, numbers, letters and localities.

COMMUNICATION BUS — Serves as a common interconnection between units.

STORED PROGRAM CONTROL NO. 1A(SPC - 1A) SYSTEM COMPONENTS (ETS AND TSPS)

PROCESSOR (P)
- Monitors and controls Peripheral Units.
- Uses logic circuitry to process data.
- Executes instructions read from the Store.
- Writes temporary call processing data into the Store.

STORE (S)
- Provides semipermanent (protected) memory area for storing operational program and translation tables.
- Provides temporary (unprotected) memory area for storing call processing information.

PROGRAM TAPE UNIT (PTU)
- Provides rapid means for implementing large data changes into the Store.
- Tape serves as Store back-up memory.

CENTRAL PULSE DISTRIBUTOR (CPD)
- Enables Master Scanner (MS) and Signal Distributor (SD) units.
- Output is applicable to interfacing peripheral equipment.

TIME DIVISION SWITCHING CONCEPT (AIS)

Trunks and other circuits are arranged in Subgroups
- Each Trunk within a Subgroup may be connected to its Subgroup Bus (SGB) by closing a Time Division Switch (TDS) within the Trunk Circuit.

Each SGB is equipped with 2 TDS's (one for interconnection with each of 2 Intergroup Buses (IGB)
- For simplicity only one IGB is shown on the diagram.

Any Trunk can be connected to any other Trunk by closing appropriate SGB and IGB switches during the same Time Slot (TS).

70 TS's (35 associated with each IGB) are generated every 86.24 usec cycle.
- Each TS lasts about 2.5 usec and has a sampling interval of 0.8 usec.
- Sampling occurs once on each TS every 86.24 usec (about 12,000 times per second).

3 TDS's are closed when making an intragroup connection (TS-5).
- The SGB must be connected to the IGB even though this connection is not required for transmission.

4 TDS's are closed when making an intergroup connection (TS-3 or TS-4).

AIS - SYSTEM COMPONENTS

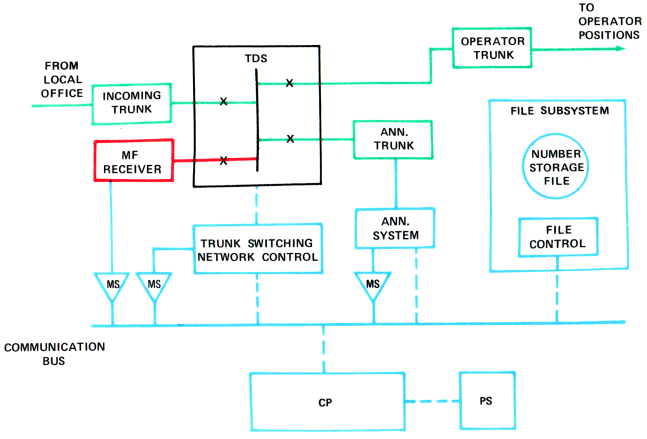

STORED PROGRAM CONTROL NO. 1A (SPC-1A) SYSTEM COMPONENTS

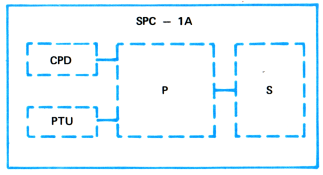

TIME DIVISION SWITCHING CONCEPT (AIS)

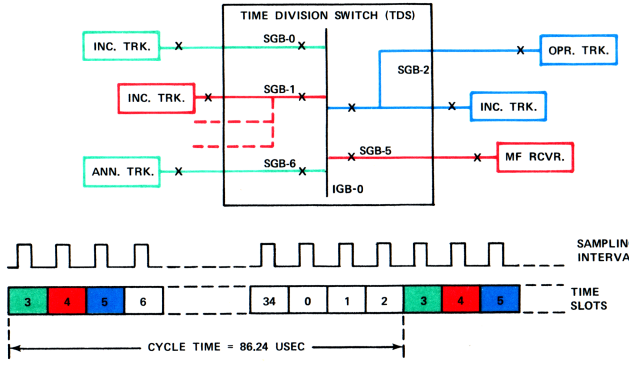

NO. 101 ESS - SWITCH UNIT COMPONENTS

TIME DIVISION SWITCH (TDS) – Provides switching flexibility between Lines (Stations) and Trunks.

SWITCH STORE & CONTROL –
- Scans Lines & Trunks to detect changes in busy/idle status.
- Generates Time Slots (TS) for TDS.
- Establishes TDS connections between Lines and Trunks.
- Stores connection data.

DATA LINK – Provides two-way communication of control information between the Switch Unit and the Control Unit.

DIGIT TRUNK – Provides Switch Unit access to centralized digit receiving equipment.

CENTRAL OFFICE (C.O.) TRUNK – Provides means for interconnecting the Switch Unit and the Control Unit with the associated Central Office.

NO. 101 ESS - CONTROL UNIT COMPONENTS

CALL PROCESSOR (CP) – Consists of the Program Control Logic (PCL) Program Stores (PS) and Call Stores (CS).

PCL – Performs the data manipulations that CP requires to read, interpret and execute program commands.

PS –
- Provides a semipermanent (READ ONLY) memory.
- Contains the #101 ESS operational program and administrative data peculiar to each Switch Unit.

CS –
- Provides a temporary (READ/WRITE) memory.
- Contains updated data for all calls in progress.

LINE INFORMATION STORE (LIS) – Provides semipermanent (READ ONLY) memory of Line and Trunk assignment data.

INPUT/OUTPUT CONTROL (I/O) – Serves as a buffer between CP and the Switch Units.

TRUNK CONTROL – Provides interface between the #101 ESS and its associated central office.

TSPS NO. 1 - SYSTEM COMPONENTS

SPC–1A – See SPC–1A components

NETWORK CONTROL – Opens or closes network switching paths in response to instructions from SPC-1A.

SWITCHING NETWORK – Provides switching flexibility between Trunks and Operator Positions or Service Circuits.

POSITION SUBSYSTEM –
- Consists of the Operator Positions in a Chief Operator Group and the Common Control Equipment that services the positions.
- Data communication with the SPC-1A is independent of the Switching Network.

SIGNAL DISTRIBUTOR (SD) – Controls peripheral unit functions by operating relays in these units.

MASTER SCANNER (MS) – Monitors all points in the TSPS (except trunks and the Position Subsystem) from which the Processor needs information.

TRUNK SCANNER (TS) – Monitors the status of trunks.

COMMUNICATION BUS – Provides interface between the SPC-1A and peripheral units.

NO. 101 ESS - SWITCH UNIT COMPONENTS

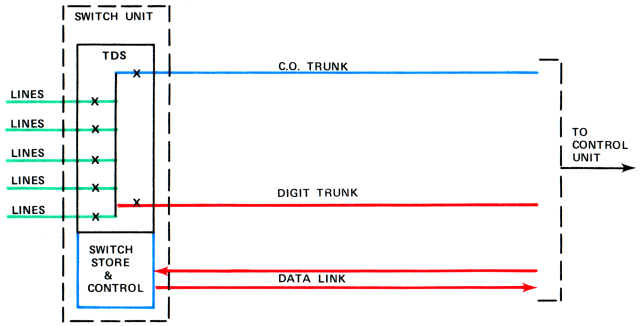

NO. 101 ESS - CONTROL UNIT COMPONENTS

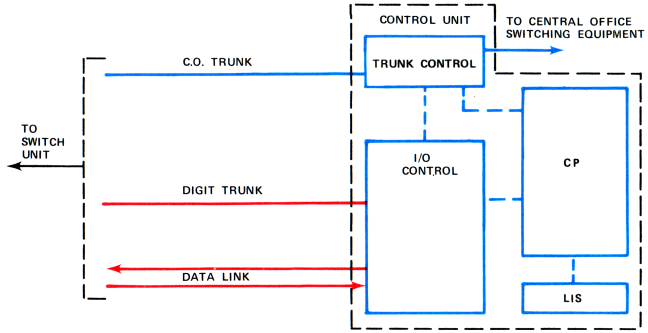

TSPS NO. 1 - SYSTEM COMPONENTS